TV SWEEP CIRCUITS

AND SERVICE APPLICATION NOTES

★ *Hi-Efficiency Circuit* ★ *Service Hints* ★ *Basic Theory*

★ *Application Data Sheets* ★ *Replacement Guide*

Prepared especially for the TV Service profession, this booklet gives technical information on the practical usage of G-E television components, and assists the serviceman in using the line of G-E parts in various magnetic deflection circuits.

GENERAL ELECTRIC QUALITY FEATURES

- *Picture Tested Transformers & Yokes*
- *Ferrite Cores*
- *Formex Insulated Wire*
- *Thermoplastic Bonded Coils*
- *Nylon Coil Forms*
- *Direct Replacements*

More details on page 14

GENERAL ELECTRIC

PRICE 15 CENTS (SECOND PRINTING)

HI-EFFICIENCY SWEEP CIRCUIT

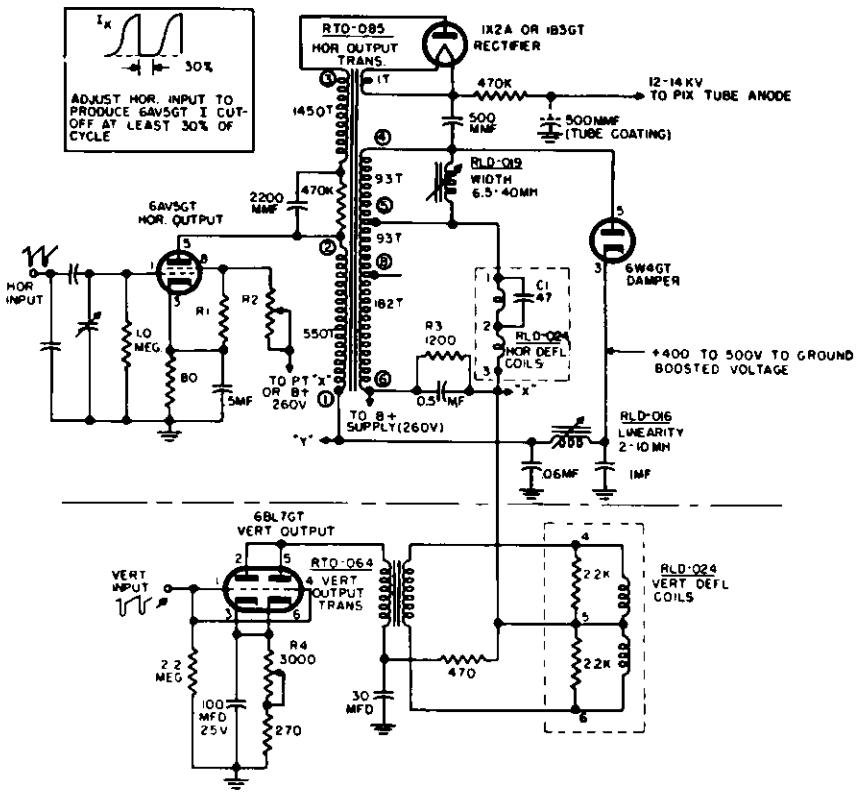

FIG. 1. SWEEP CIRCUIT FOR 66°-70° PICTURE TUBES, 14-INCH THRU 24-INCH

KIT OF MAJOR G. E. COMPONENTS FOR FIGURE 1:

1 - RTO-085 Horizontal Output Transformer
1 - RTO-064 Vertical Output Transformer
1 - RLD-024 or RLD-025 Sweep Yoke
1 - RLF-038 Focus Coil
1 - RLD-019 Width Control
1 - RLD-016 Linearity Control
1 - RET-003 Ion Trap Magnet

CIRCUIT FUNCTIONS:

The GE horizontal output stage is unique in its high efficiency, producing up to 70 degrees horizontal sweep with a plate circuit load of only 20 watts (approx.).

Ferrite yoke and transformer cores are employed to give this outstanding performance, and are now used by many TV set manufacturers as original equipment, following the GE lead in this development.

The 260 V. "B" supply (see schematic, Figure 1) is available from a selenium voltage doubler rectifier system from 117 V. line supply.

The output power tube is the new GE 6AV5-GT which has been specifically developed for high efficiency sweep circuits.

Plate power feedback is used to full advantage via an inexpensive damper tube, Type 6W4-GT. A single 1X2-A or 1B3-GT is sufficient for the production of 13 to 14 KV anode supply voltage for the picture tube.

An auxiliary load of about 20 MA. should be connected at point X. The amount of this load will depend on other circuit conditions. The benefits of this connection are:

1. Improved centering of picture.
2. Improved linearity (decompression at right side of picture).
3. Desaturation of Horizontal Sweep Transformer core.

Connection of this load should be made to constant current circuits such as screen of horizontal output tube or plate of vertical output tube, as shown.

Correct centering of picture is also affected by the position of the focus coil, and by the exact value selected for R3. A change in the auxiliary load at point X may require a slight change in the value of R3.

R1 (G. E. Stock #RRW-061) is a voltage sensitive resistor used in this circuit as a voltage regulator. It has the unusual negative resistance characteristic that as soon as voltage is increased across its terminals, its resistance decreases immediately. As used in this circuit: An increase in line voltage would increase the B+ supply and tend to increase

HI-EFFICIENCY SWEEP CIRCUIT

the screen voltage of the horizontal output tube, resulting in greater sweep width. However, a slight increase in screen voltage applied to R1 causes a decrease in the resistor's ohmic value, causing the resistor to draw more current. The additional current flowing thru the series resistor to the B+ supply increases the voltage drop across the series resistor. The action resembles that of a voltage regulator tube.

Under ordinary no-voltage resistance test R1 measures several megohms; while operating in the circuit at 155 volts its resistance is about 16.5 K ohms, which is best determined by taking current and voltage readings and using Ohm's law.

R2, screen dropping resistor, (approximately 5K ohms) should be selected to produce a voltage drop of exactly 155 volts across R1, with the TV set operating at rated line voltage. The 155 volts should be measured from pin 3 to pin 8 on the 6AV5 output tube. R1 current should be about 9 or 10 ma.

The use of the voltage sensitive resistor is not absolutely essential; an ordinary wire wound resistor of proper ratings may be used.

HORIZONTAL DRIVE WAVE SHAPE:

A sawtooth input signal voltage is required to secure the cathode current waveshape indicated on the schematic. This current waveform may be examined with an oscilloscope connected across a 10 ohm unby-passed resistor inserted in the cathode lead of the 6AV5-GT output tube.

Horizontal input signal amplitude should be adjusted to produce a bright vertical bar just to the left of the center of the raster, and then reduced slightly to extinguish the bar.

VERTICAL SWEEP:

A high efficiency vertical output stage is indicated in Figure 1. The new plate circuit does not require "boosted" voltage from the horizontal sweep circuit, but operates from +260 volts. Removal of this load from the boost voltage results in improved horizontal circuit efficiency. However, it is recommended that the vertical sawtooth forming generator tube (not shown) be supplied from the "boosted" voltage at point Y, to improve sweep regulation.

A connection is made from terminal #5 on the vertical deflection coils to B+. This connection reduces voltage stress on the coil insulation and reduces electrostatic cross-talk.

The amplitude of the vertical input signal and R4 in the 6BL7-GT cathode circuit should be simultaneously adjusted for correct picture height and linearity.

R4, linearity control, is included to insure that the sawtooth current thru the vertical deflection coils is linear. When the resistance of R4 is sufficiently increased, the 6BL7 will operate in a non-linear manner which is opposite in curvature to the applied grid voltage. The resultant output of the 6BL7 produces a linear sawtooth yoke current.

SERVICE HINTS

GENERAL SUGGESTIONS FOR ADJUSTING SWEEP WIDTH, LINEARITY AND HIGH VOLTAGE

The following information is given to assist in correcting variations which may be encountered in servicing sweep circuits, in making part replacements and in making conversions to larger size picture tubes.

TO INCREASE SWEEP WIDTH (Refer to Figure 2):

1. Size Control--The greater the inductance of the size control (L1 in Figure 2), the less power it will absorb from the output circuit resulting in greater sweep width. The Stock RLD-014 size control used in the majority of our TV receivers has the least inductance. The use of Stock RLD-019 (intermediate) or RLD-018 (maximum inductance) will permit an increase in sweep width of approximately 1/4-inch and 1/2-inch respectively when they are substituted for the RLD-014 control. The location of the size control across the transformer secondary also determines to what extent the size will be varied. Greatest sweep width is obtained by connecting the size control across the secondary taps with the fewest turns such as between terminals 5-8 or 5-4.
2. Capacity Loading--By adding capacity across the secondary of the sweep output transformer (C1 in Figure 2), the sweep width is increased --- the greater the capacity, the greater the sweep width up to a critical point. The more capacity added, the slower will be the retrace with the result that foldover of the picture takes place after the capacity is increased too much. Usually values of capacity up to 1000 mmf. between terminals 6-8 may be added before running into this difficulty. The addition of capacity also results in a lowering of the picture tube high voltage. Since a high peak voltage exists across this winding, a mica capacitor of 750-1000 volt rating should be used for this purpose.

SERVICE HINTS

3. Tube Change--When the width is just shy of filling the mask, a change in the horizontal sweep output tube may give the desired increase.

4. Pix Tube Anode Voltage--By reducing the picture tube anode voltage, the sweep width and height are simultaneously increased. When the high voltage capacitor, C2, is originally connected to tap #4 of sweep output transformer, the high anode voltage may be reduced approximately 1000 volts by reconnecting the ground side of C2 to B- instead of to this tap. Note---A change in picture tube voltage affects the focusing control circuit.

5. Increase in Screen Voltage--By increasing the screen voltage on the output tube, the sweep output may be increased. This method is not recommended unless a careful check of the screen and plate dissipation of the tube is measured and then kept within the tube limitations. This change also increases the picture tube anode voltage.

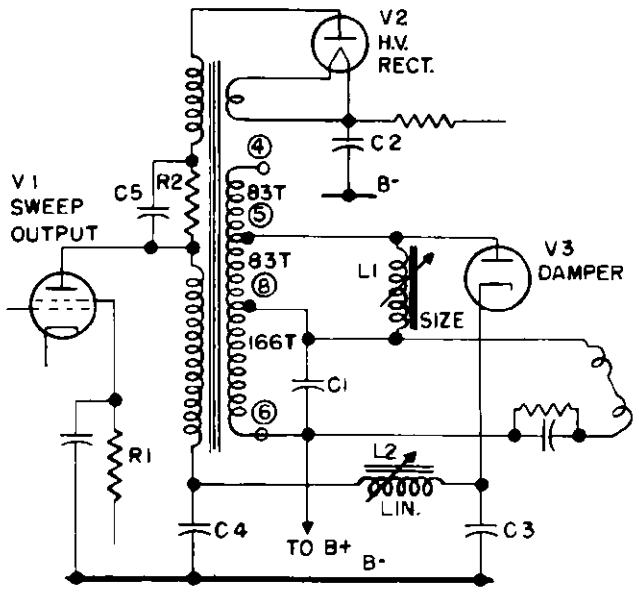

FIG. 2. SCHEMATIC

TO DECREASE SWEEP WIDTH:

In general the opposite to the recommendations made for increasing the sweep width, will give the desired results.

1. Size Control--Use RLD-014 control and connect between terminals 6-8 instead of terminals 5-8. This will usually reduce size to any desirable degree. The picture tube anode voltage will also be reduced somewhat.

2. Capacity Loading--If a capacitor is connected across the secondary winding, reduce size of capacitor or remove it completely from circuit. A reduction of capacitor value increases the high voltage output.

3. Decrease in Screen Voltage--Reducing the screen voltage by increasing the screen dropping resistance will effectively reduce the dissipation on the output tube which in turn reduces the horizontal sweep output. Since a reduction in screen voltage also results in lower picture tube anode voltage, a careful check of this voltage should be made when this method of size reduction is attempted.

TO CHANGE LINEARITY:

The conversion to a different sweep transformer should not affect the linearity enough so that the control will not compensate for it. However, the various factors influencing linearity are herein discussed so that they may be taken into consideration when correcting for linearity troubles in the system.

1. Damper Tube Connection--The damper tube must be connected to most efficiently match the output requirements of the system. When the B+ boost voltage is supplied to additional tubes as well as the horizontal sweep output, the damper tube is usually connected to tap #5. If connection is made to terminal #4 and the left edge of the picture is compressed, it indicates that the circuit is overdamped, and the damper plate should be dropped down to tap #5. If connection of damper tube plate is made to tap #8 and the picture shows inadequate damping in the form of successive foldover lines (vertical white bars), stretch, or ripples, then the damper tube must be moved up to tap #5 or #4. Note--When changing damper tube connection, do not permit cathode voltage to go more positive than 450 volts in respect to heater.

2. Linearity Circuit (L2, C3, C4)--The variable inductance L2 (linearity control) and capacitors C3 and C4 form a phasing network whose component values are chosen to give the required phase control which in turn controls the linearity. In general, a low value of L2 or C3 will give a wider range to linearity control, however, they should not be reduced too far as the control becomes critical. As an example, C3 in many receivers is a 0.1 mfd. and if changed to a 0.02 mfd., the linearity range would be more pronounced but would also be critical. The change in value of C4 does not have a very noticeable effect on linearity and should be maintained near the recommended value.

3. Size Control Inductance--Too low value of inductance in the size control will cause the right side of picture to be crowded. As an example, if this condition is existent when RLD-014 size control is used, change to an RLD-018 or RLD-019.

4. Deflection Yoke--A high Q yoke will spread the left edge of the picture, while a low Q yoke will compress the left edge of the picture. This information will not be of value when making a direct replacement but will be of value when attempting to utilize a substitute yoke.

SERVICE HINTS

TO INCREASE OR DECREASE PICTURE TUBE ANODE VOLTAGE:

1. Connection of C2--The connection of the ground return side of the high voltage filter capacitor C2 is the most effective means of controlling the high voltage output. By connecting the ground return of C2 to tap #4 instead of B- as shown in the illustration, the voltage will be increased by approximately 1000 volts. By connecting it to taps #5 or #8, correspondingly lower values may be obtained.
2. Capacity Loading--The addition or increase of the capacity value of C1 across the secondary of the transformer decreases the high voltage output. This change also increases the sweep width as described in a previous paragraph.
3. Screen Voltage--A reduction or increase in screen voltage provides a corresponding change in the high voltage output. This change also influences the sweep width. Note---Any increase in the high voltage will decrease the sweep width or vice-versa.

TROUBLE-SHOOTING:

If loss of high voltage is indicated by little or no brightness, a voltage reading should be made between the anode cap and ground. If the voltage checks low at this point, a plastic handle screwdriver, held well back on the handle and not grounded, can be used to touch the cap of the high voltage rectifier first and then the cap of the horizontal output tube. If a good spark is noticed at the cap of the rectifier try a new tube. If this doesn't correct the trouble, check for a short in the high voltage capacitor or an open resistor between the rectifier filament and the picture tube anode cap. If a good spark is obtained at the cap of the output tube, but not at the rectifier tube cap, try a new output tube first and then a damper tube. If this doesn't correct the trouble, make a voltage check and then a resistance check in the output tube circuit. This test is only suggested for use on receivers having a kickback or r-f type of HV power supply, and then only with considerable caution. Under no conditions use this test in projection type receivers or those having a 60-cycle h-v power supply.

A defective horizontal output transformer will usually result in complete loss of high voltage or, if a picture is visible, it will be very faint or have the appearance of water running horizontally through it.

If the R3, located in the high voltage lead, increases in value the picture will bloom when the brightness control is advanced. This resistor is usually only one-half watt in size and any temporary short at the anode cap may cause it to overheat and increase considerably in resistance.

USE OF R2 AND C5:

Addition of R2 and C5 connected between the primary and tertiary windings has no noticeable electrical effect in the circuit unless they become open. They are incorporated for Underwriter Lab purposes to prevent an accidental B+ or line voltage connection to the chassis should the plate cap of the H. V. rectifier tube touch the chassis on a "transformerless" receiver.

If C5 opens up, the voltage will drop to the point where no brightness is visible. If this condenser is suspected, bridge it with a good .002 mfd. mica. This condenser provides a path for the 15,750 cps voltage across R2.

BASIC THEORY — HORIZONTAL SWEEP CIRCUIT

The object of the deflection circuits is to cause the electron beam to move linearly across the screen from left to right at a rate of 15,750 times per second, and at the same time to move linearly from top to bottom at a rate of sixty times per second. We know that a sawtooth wave of voltage is required to produce this effect in a receiver using an electrostatic type of picture tube and that a sawtooth wave of current is required in receivers using an electromagnetic type of picture tube. It is equally important that the retrace portion of the sawtooth wave be steep enough to return the electron beam to its proper position on the screen in order to correctly reproduce all of the picture information. If the retrace isn't fast enough a foldover results. This means that some of the picture information is arriving at a time when the beam should be blanked out, but due to the retrace being too slow, it results in a portion of the picture being superimposed.

Due to the frequency of the vertical oscillator being 60 cps, the retrace portion of the vertical sawtooth wave does not present the same problem as the horizontal retrace. This is apparent when the horizontal blanking or retrace time of about 10 microseconds is compared with the vertical retrace time of about 833 microseconds.

BASIC THEORY — HORIZONTAL SWEEP CIRCUIT

In order to accomplish the horizontal retrace in the allotted time, the self resonance of the output transformer and sweep yoke coils is used to produce a very fast transient voltage pulsation. The self capacitance of the horizontal sweep components must be kept low in order to insure a high resonant frequency and consequently a fast retrace.

If a small capacitor, in the order of 500 mmfd., is placed across the horizontal deflection coils, the picture size will be increased both horizontally and vertically. This is partly the result of a decrease in the high voltage which allows the deflection coils to have more effect on the electron beam, increasing the swing limits in both directions. The addition of this capacitance will also affect the resonance of the horizontal output circuit thereby increasing the retrace time and causing a foldover on the left-hand side of the picture. The amount of foldover will of course vary with the amount of capacitance added.

KICKBACK H-V SUPPLY:

When the plate current of the output tube is cut off at the end of the trace portion of each horizontal line, the magnetic field in the primary of the output transformer collapses. This produces an inductive kick of voltage across the primary of about 4000 volts. An additional winding, connected in series with the regular primary winding, steps this voltage up through auto-transformer action to about 9500 volts as illustrated in Figure 3. This voltage is applied to the plate of a H. V. rectifier which converts these pulses to D-C. An R-C filter consisting of a 500 mmfd. capacitor and a 470K ohm resistor provides sufficient filtering for application to the second anode of the picture tube. Due to the comparatively high frequency of the pulses (15,750 cps) very little filtering is required and a 500 mmfd. capacitor is adequate for the purpose. Also since the capacitor is so small, it cannot store a dangerous charge and makes the high voltage supply relatively safe.

TRANSIENT OSCILLATIONS:

The sweep output circuit has a certain amount of distributed and stray capacitance which acts with the inductance to form a resonant circuit of comparatively high frequency. As shown in Figure 3, the collapse of the magnetic field in the primary of the output transformer causes a high pulse of voltage (approximately 1000 v.) to be developed in the secondary. The sudden shock of this high pulse of voltage developed across the coil inductance during retrace will shock the resonant circuit into oscillation as shown in Figure 4-B. These transient oscillations will, if not properly damped, affect the sawtooth wave of current as shown in Figure 4-C. Since these oscillations distort the sawtooth waveform at the beginning of the trace portion of the sweep, they must be damped out. The result of proper damping of these oscillations is shown in Figure 4-E.

B+ BOOST FROM DAMPING ACTION:

Damping is usually accomplished by the use of a rectifier tube connected as shown in

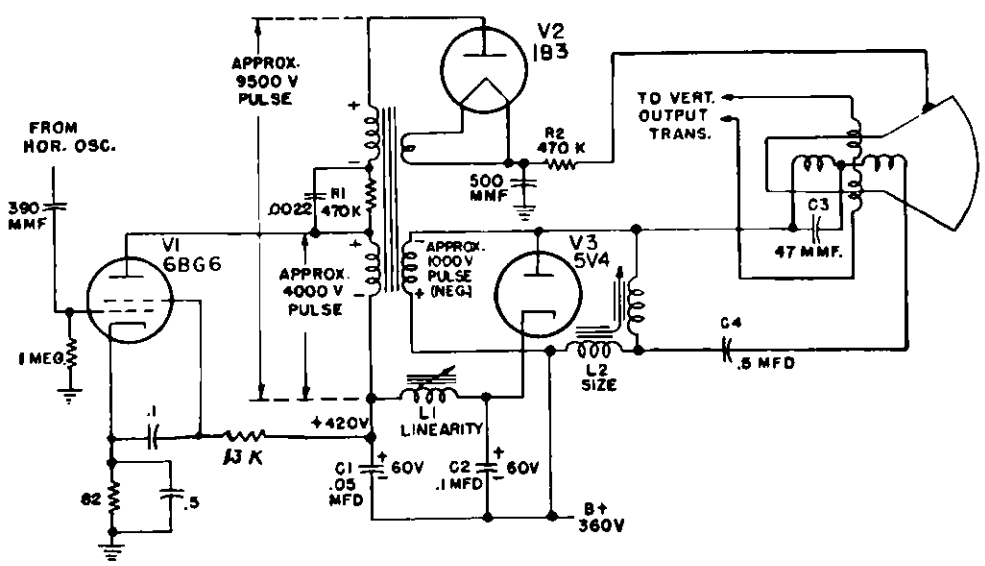

FIG. 3. TYPICAL HORIZONTAL OUTPUT CIRCUIT ILLUSTRATING VOLTAGES

Figure 3. This tube (V3) is so connected that when the magnetic field in the deflection coils begins to collapse, the high pulse of voltage developed by this collapsing field is negative in the damping tube plate. Therefore, the damping tube will not conduct until the retrace is completed and the voltage becomes positive as shown at point 1 in Figure 4-B. At this time it conducts heavily due to the first half cycle of positive transient oscillation and charges capacitors C1 and C2 (Figure 3). These two capacitors act as though a battery of 60 volts were connected in series with the regular power supply. This permits the operation of the sweep tube at approximately 420 volts although the regular B+ supply is only 360 volts.

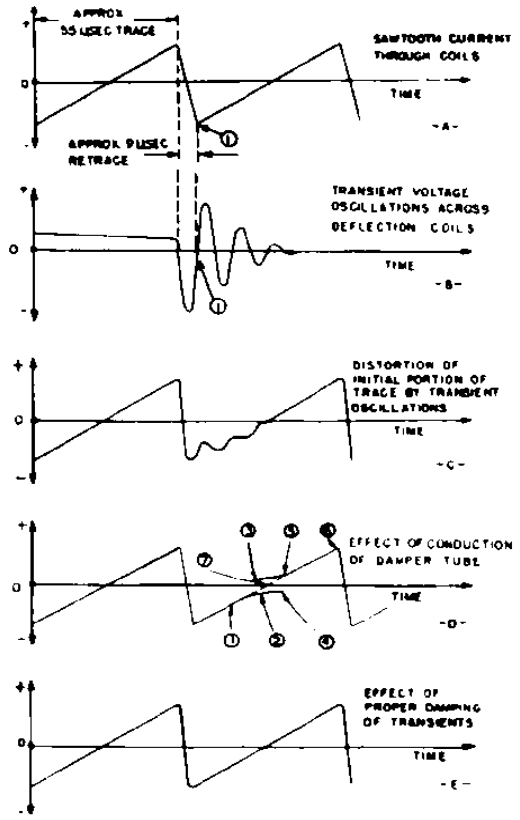

FIG. 4. CURRENT AND VOLTAGE WAVEFORMS ILLUSTRATING TRACE AND RETRACE TIME IN A WITH TRANSIENT VOLTAGE OSCILLATIONS IN B AND THE DISTORTION DUE TO THESE OSCILLATIONS IN C. THE EFFECT OF DAMPING TUBE CONDUCTION IS SHOWN IN 1, 2 AND 4 OF D AND OUTPUT TUBE CONDUCTION IN 3, 5 AND 6. THE RESULTANT CURRENT WAVEFORM ILLUSTRATING THE EFFECT OF PROPER DAMPING IS SHOWN IN E.

DAMPING OUT TRANSIENT OSCILLATIONS:

When the current through the deflection coils has reached its maximum negative value, as shown in point 1 in Figure 4-A, retrace is completed and the current through the coils will reverse its direction and start the trace portion of the sawtooth wave. However, during the retrace very little of the stored magnetic energy was dissipated since the damping tube was non-conducting and no load was placed on the oscillatory circuit. When the current through the coil reverses itself and starts the next trace period, the magnetic field also reverses itself and causes the oscillatory voltage to go in a positive direction as shown at point 1 in Figure 4-B. If no damping tube were placed across the deflection coils, the circuit would continue to oscillate at its natural frequency as shown in Figure 4-B, until the stored up energy was finally dissipated in the circuit resistance. This would result in a current wave similar to Figure 4-C, which would destroy the linearity at the beginning of the trace.

With the damping tube in the circuit however, when the oscillatory voltage starts to go positive as at point 1 in Figure 4-B, the tube begins to conduct heavily and thus places a load across the deflection coil so that it cannot continue to oscillate.

EFFECT OF DAMPING TUBE CONDUCTION:

The sweep output tube is operated so that it cuts off not only during the retrace period, but remains cut off for a part of the initial portion of the trace. During this period the sawtooth current through the deflection coils is due to the stored magnetic energy. This is indicated on the portion of the sawtooth waveform marked 1 in Figure 4-D. As mentioned previously, the stored up energy in the magnetic field is dissipated by the load which the damping tube places across it at a rate that is suitable for linear trace. As the rate of decay starts to approach a non-linear condition as at point 2 in Figure 4-D, the sweep output tube begins to conduct as indicated at point 3, and takes over the task of maintaining current through the deflection coil somewhat before the magnetic energy that was stored up in the coil is completely dissipated at point 4. The output tube supplies current to the deflection coil of almost constantly increasing amplitude from point 5 to point 6. When point 6 is reached the sweep output tube is again cut off, retrace is initiated and the entire cycle repeats itself. The current through the deflection coil due to conduction through the damping tube and that due to the sweep output tube are curved at the crossover point 7. When they are combined, however, they produce a current through the coil that is linear at this point as indicated by the dashed line. The result is a linear sawtooth as shown in Figure 4-E.

The current waveform across either the horizontal or vertical deflection coils can be observed by inserting a small resistor (about 10 ohms) in series with one low potential lead of either coil. The vertical input leads of an oscilloscope should then be connected across this resistor. The waveform observed should be a sawtooth and any variation can be traced back through the respective circuits by comparing the waveforms at the grid, plate, and in some multivibrator circuits the cathode of each tube with those given in either the manufacturers service notes or some source of this information such as Television Service Manuals.

HORIZONTAL OUTPUT TRANSFORMER

RTO-085

Especially designed for 66°-70° picture tubes. Super grade ferrite iron core. When used with a wide angle deflection yoke such as the RLD-024, an exceptionally high efficiency magnetic sweep and high voltage system is obtained. Circuit power drain is less than with lower Q transformers, and less B+ voltage is required.

The transformer incorporates, in addition to the primary, a one turn loop for the high voltage rectifier filament, a tertiary winding and a tapped secondary. The tertiary winding and primary act as an autotransformer to supply voltage to the plate of the high voltage rectifier. The tapped secondary provides for various arrangements of size control, damper tube and for matching various yoke impedances.

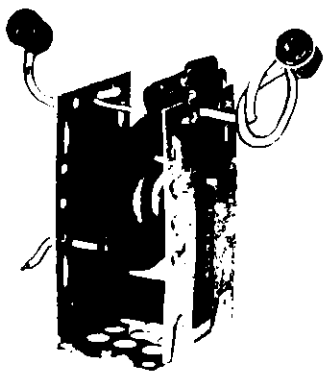

Nominal Output to H. V. Rectifier Plate: 12 to 13 KV.
Maximum: 15 KV.

	PRI.	SECONDARY			TERT.
Terminals	1-2	4-6	4-8	4-5	H. V.
D.C. Res.	42	24	12	6	470
Turns	550	368	186	92	1450

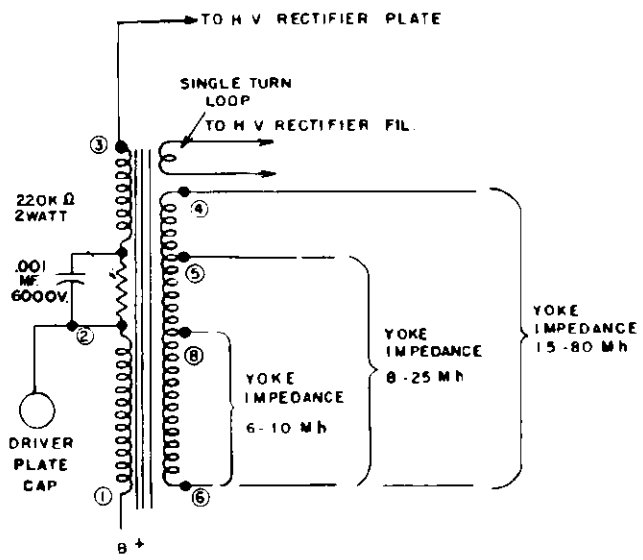

SCHEMATIC DIAGRAM

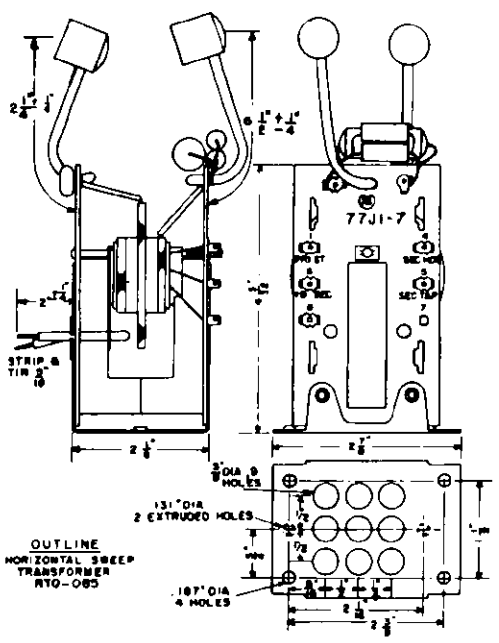

DIMENSIONAL OUTLINE

Replacement Notes.

In certain G. E. receivers the original transformer is equipped with a rigid high voltage lead. This is an Underwriters Laboratory requirement and is not needed on the RTO-085 replacement because the resistor and capacitor connected between the primary and tertiary winding covers the Underwriter's safety requirement.

RTO-085 may be used in place of RTO-090.

HORIZONTAL OUTPUT TRANSFORMER
RTO-092

For general replacement use in TV sets of many makes employing kick-back High Voltage systems. Has Hi Q ferrite iron core; equipped with long leads. The RTO-092 is an electrically exact replacement for many TV receivers, as indicated in the cross-reference on the back cover of this booklet.

This transformer may also be used with picture tubes from 8" to 19" sizes with B+ supply voltages ranging from 125 v. to 350 v. by proper selection of yoke, size control, and damping tube.

The RTO-092 incorporates in addition to the primary a one turn loop for the high voltage rectifier filament, a tertiary winding and a tapped secondary. The tertiary winding and primary act as an autotransformer to supply voltage to the plate of the high voltage rectifier. The tapped secondary provides for various arrangements of size control, damper tube and the matching of various yoke impedances.

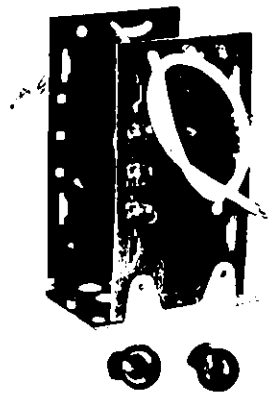

Nominal Output to H. V. Rectifier Plate: 12 to 13 KV..... Maximum: 15 KV

	PRI.	SECONDARY			TERT.
Terminals	1-2	4-6	4-8	4-5	H. V.
D.C. Res.	42	24	12	6	370
Turns	500	333	166	83	1200

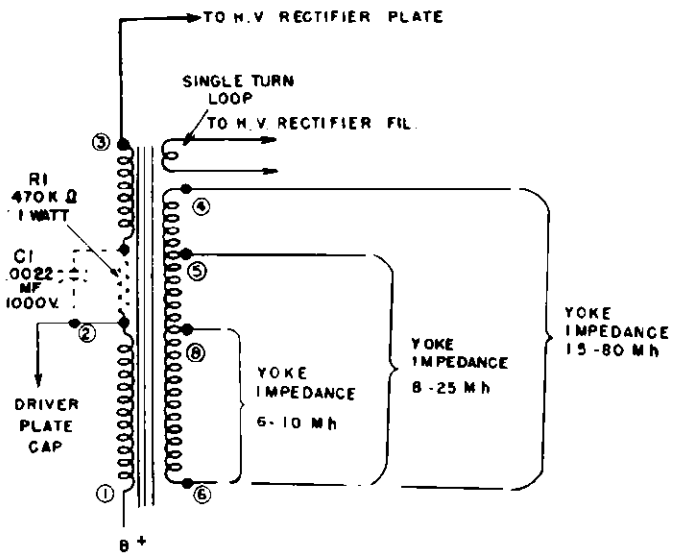

FIG. 1. SCHEMATIC DIAGRAM

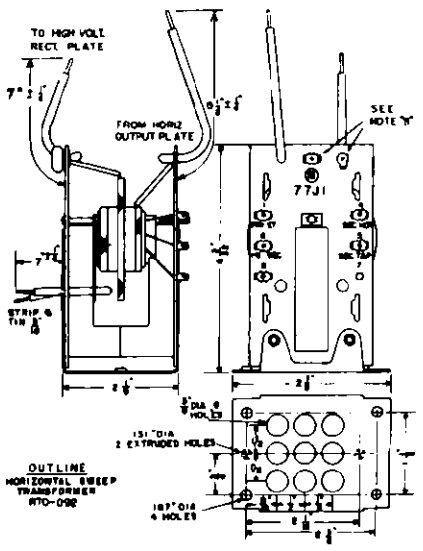

FIG. 2. DIMENSIONAL OUTLINE

Replacement Notes.

A. RTO-092 may be used to replace RTO-076.

B. A resistor and capacitor (R1, C1, Figure 1) or wire jumper must be connected across the two terminals on the top of the transformer (terminals shown in Figure 2).
The resistor and capacitor are a UL requirement in certain TV circuits where specified as original equipment on the schematic. For this type replacement remove the resistor and capacitor from the old transformer and install them on the new one. A wire jumper may be substituted where the resistor and capacitor are not specified.

C. The RTO-092 is equipped with long leads to eliminate the need for splicing. Splicing of leads to the H. V. rectifier gives rise to corona troubles and must be avoided. Cut all plate and filament leads to fit exactly, and dress away from ground and surrounding objects (at least one inch). Make sure the solder is smooth, with no sharp points or strands of wire protruding.

D. The 2 plate caps furnished are for .36" diameter tube caps. For .25" diameter tube caps, the clips may be bent closer together or the old caps on the defective transformer may be reused.

EM-PM FOCUS COILS
RLF-026, RLF-028, RLF-038

These three units are of the combination EM-PM type requiring less power than the straight EM coils. The contribution of the PM magnet to the total focusing flux compensates partially for the change in focus due to line voltage fluctuations, thereby maintaining a more constant focus.

The three units are equipped with 15" leads and a single mounting bracket to fit G. E. deflection coil assemblies. When used with G. E. deflection yokes, unique mounting brackets on the yoke and focus coil allow both vertical and horizontal centering by tilting the focus coil.

The coil is wound on a nylon form, assuring an outstanding operating life.

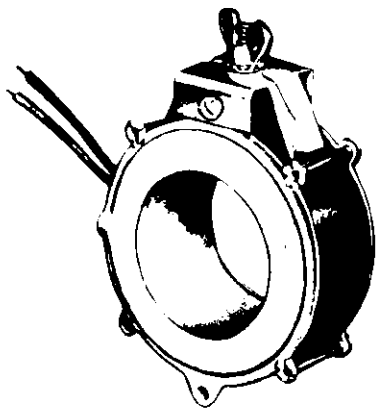

	RATINGS			TYPICAL OPERATING CHARACTERISTICS			
	DC RES. OHMS	WATTS MAX.	NO. TURNS	PM GAUSS	COIL CURRENT	ANODE VOLTAGE	TUBE SIZE DEF. ANGLE
RLF-026	1300	4	6000	115	30 ma.	11 kv.	10"-52°
RLF-028	1300 1300	4 4	6000 6000	140 140	30 ma. 30 ma.	11 kv. 16 kv.	12"-52° 16"-53°
RLF-038	1400 1400	4.5 4.5	6700 6700	150 150	30 ma. 30 ma.	13 kv. 13 kv.	16"-70° 19"-66°

PHYSICAL SPECIFICATIONS.

Notes.

A certain amount of care should be exercised in handling these units----like any other permanent magnet, they are subject to damage if not handled properly.

a. Do not let them come in contact with other focus coils or any other permanent magnet.

b. Do not subject them to severe shock.

c. Unless properly packaged, do not place them on a metal desk, bench, etc., or store them in metal bins. In certain G. E. receivers where this focus coil is designated as a replacement, the original production part will have two mounting brackets of a different design. Discard the single bracket and install the two brackets on the replacement unit in the same manner as they were on the production unit.

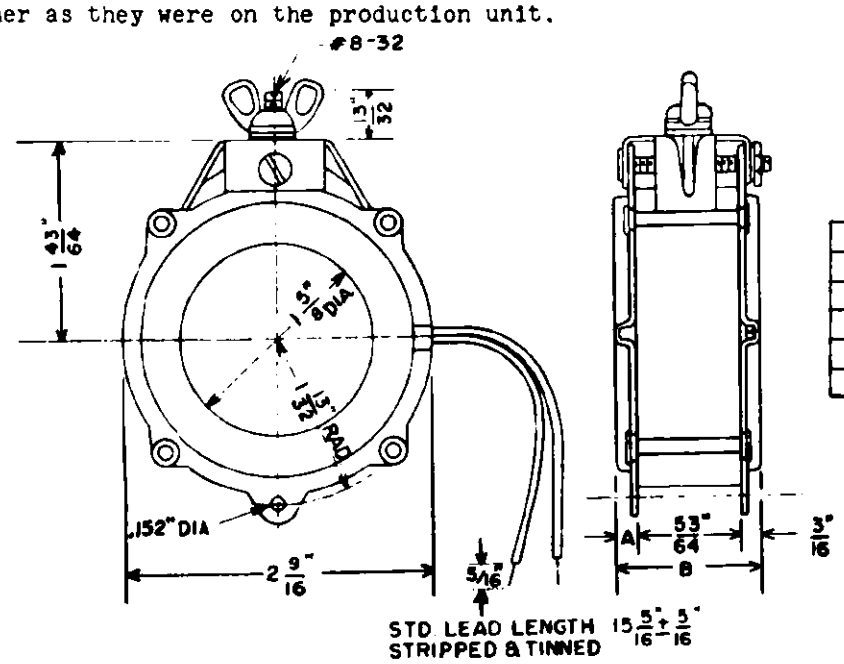

CAT. NO.	A	B
RLF-026	11/16"	1 1/4"
RLF-028	11/16"	1 1/4"
RLF-038	13/16"	1 13/16"
RED LEAD-POSITIVE		
BLUE LEAD-NEGATIVE		

ORIENT LEAD END TOWARD TUBE BASE

OUTLINE DIMENSIONS

VERTICAL OUTPUT TRANSFORMER
RTO-064

For use in magnetic deflection circuits to sweep any angle picture tube from 50° to 70°. Designed to couple the plate of the vertical output stage to the sweep yoke.

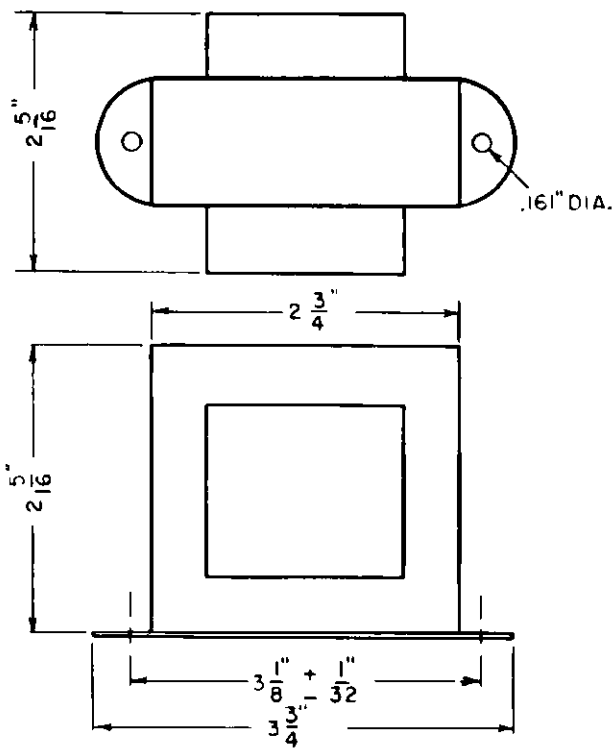

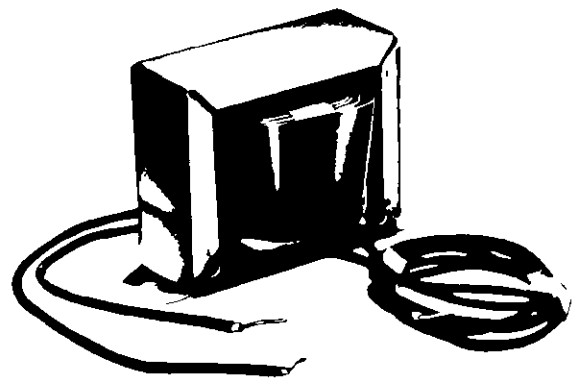

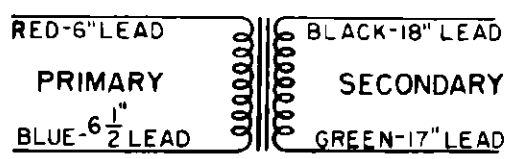

Primary Impedance @ 400 CPS with 10 ma. D.C. ..... 23,000 ohms

DC Resistance: Primary..... 1200 ohms
Secondary..... 7.5 ohms
Maximum DC Primary Current (limited by core saturation)..... 20 Ma.
Turns Ratio, Primary/Secondary..... 10/1

ION TRAP MAGNETS
RET-003, RET-005

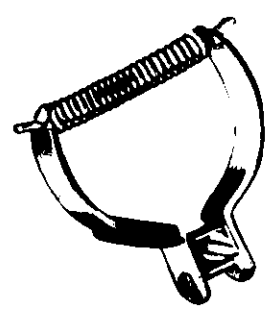

Intended for use with cathode ray tube with a neck diameter of 1 7/16" in sizes from 10" through 24", which are designed to utilize a single magnet for bending the electron beam.

	FLUX DENSITY	APPLICATION
RET-003	42 gauss	14" - 16" rect. 13 KV 24" round 18 KV
RET-005	35 gauss	10" - 12" round 11 KV 19" round 14 KV

Adjustment:

To start the adjustment place the ion trap on the neck of the tube over the ion trap flags near the tube base, then move the trap forward and backward at the same time rotating it to obtain the brightest raster. Reduce the brightness control setting to slightly above average brightness and adjust the focus control for sharp focus of the line structure. Again adjust ion trap as above for maximum brightness at the same time reducing the brightness control to maintain average brightness.

WIDTH AND LINEARITY CONTROLS

RLD-014, RLD-016, RLD-019, RLD-020

All the units in this group are single coils and similarly constructed using the same mounting arrangement, differing only in the winding specifications.

The coils are generously designed, as a safeguard against overheating and lead breakage. Screwdriver adjustable ferrite cores are used providing a high Q unit.

Although designed for use in the G. E. high efficiency horizontal system, their versatility is such as to make them satisfactory replacements in many other make receivers.

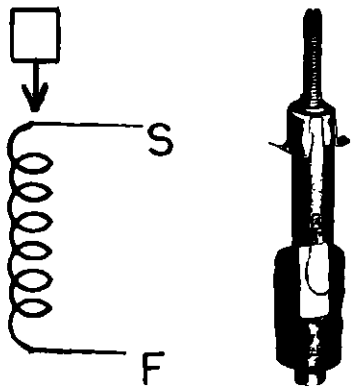

ELECTRICAL SPECIFICATIONS

	INDUCT. @ 1000 CPS	D.C. RES.
RLD-014 (Width/Linearity Control)	4-27 mh.	30 ohms
RLD-016 (Linearity Control)	1.3-11.5 mh.	16 ohms
RLD-019 (Width Control)	6.4-40 mh.	36 ohms
RLD-020 (Linearity Control)	.3-3 mh.	7 ohms

HORIZONTAL OSCILLATOR COIL

RLC-091

Ferrite core oscillator coil is center-tapped for use in a sine wave horizontal oscillator circuit employing automatic frequency control.

ELECTRICAL SPECIFICATIONS

Inductance at 1000 CPS
Total..... 14-100 mh.

D-C Resistance
Total..... 102 ohms
Start to Tap..... 42 ohms

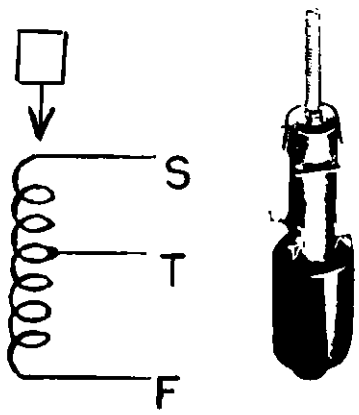

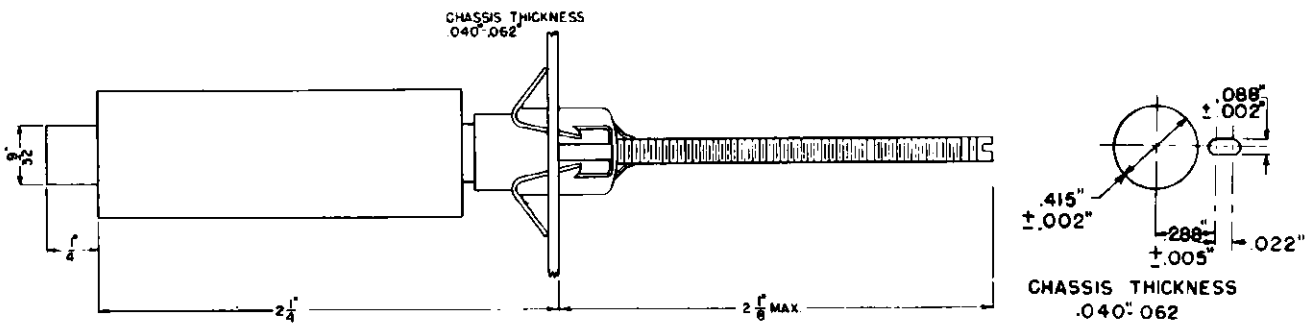

PHYSICAL SPECIFICATIONS FOR ALL ITEMS ON THIS PAGE

SWEEP YOKE
RLD-024

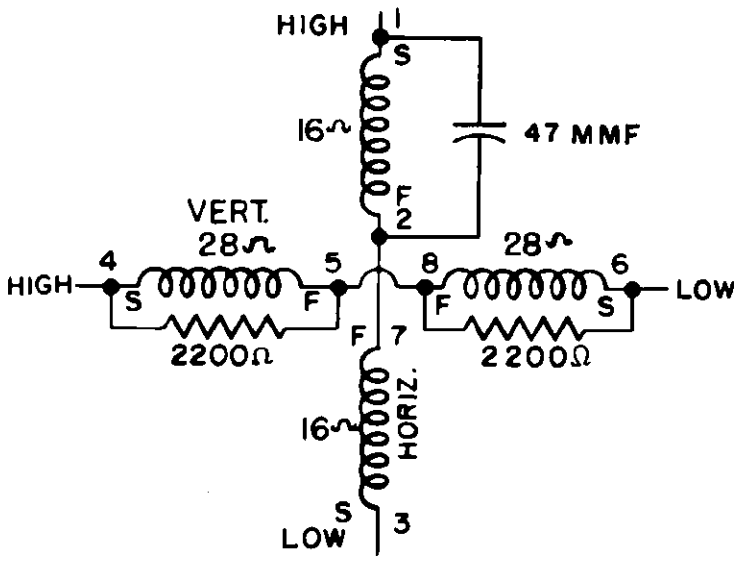

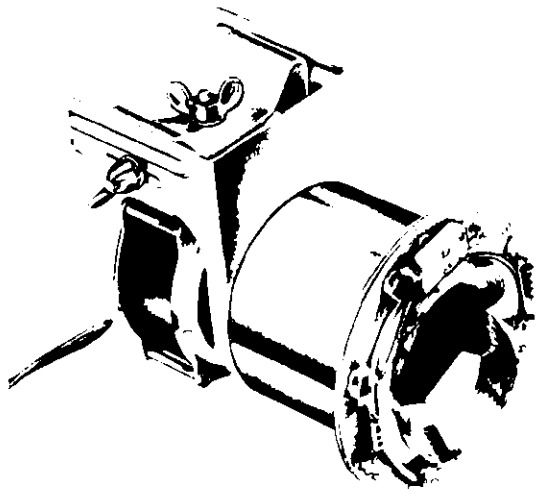

RLD-024 YOKE SHOWING RLF-038
FOCUS COIL IN POSITION

For use in magnetic deflection circuits with picture tubes having a nominal neck diameter of 1 7/16", and sweep angles of 66° to 70°, such as the 14CP4, 16KP4, 19AP4, and 24AP4.

Equipped with an aluminum housing and mounting bracket to fit G. E. focus coils. Utilizes the highest efficiency ferrite core. Recommended for use with G. E. Horizontal Output and High Voltage Transformer RTO-085 or equivalent.

G. E. wide angle yoke windings are precision wound to their exact shape. Infra-red baking then sets the coil shape permanently before removal from the winding arbor. The shaping operation, with its tendency to crush wire insulation, is thus eliminated. The completed coils are assembled on nylon forms to insure long life and trouble-free operation.

Pictured at right is a yoke winding ready to be assembled in the yoke.

	HORIZONTAL COILS	VERTICAL COILS
Inductance at 1000 CPS	15 mh.	30 mh.
D-C Resistance	29 ohms	52 ohms
Wire Size (Formex)	#30	#31

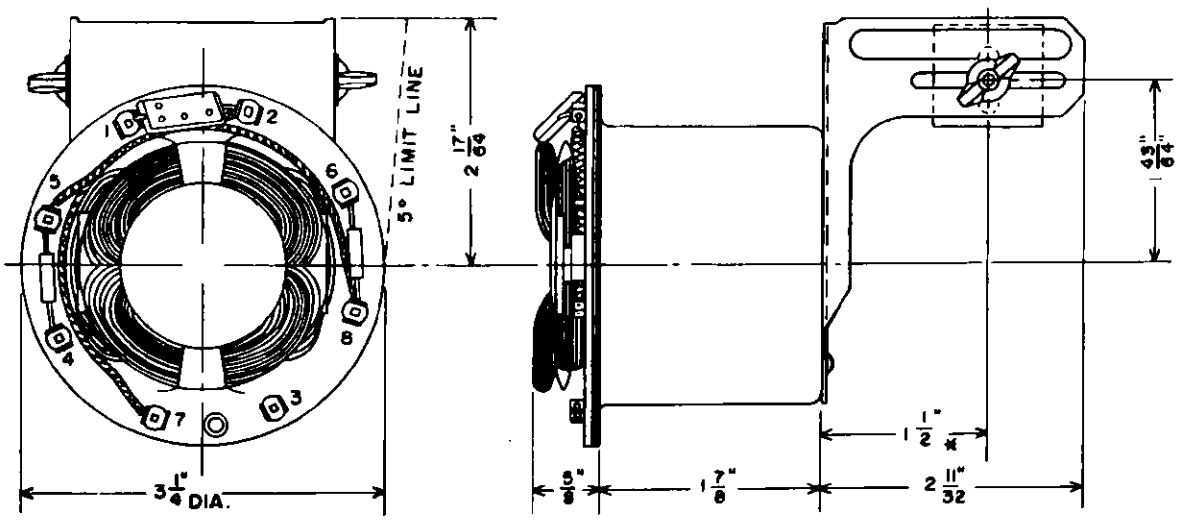

OUTLINE DIMENSIONS

SWEEP YOKE

RLD-025

This yoke is electrically identical with the RLD-024 and will operate with the same type tubes. It does not have a focus coil mounting bracket, but does have an aluminum housing with a picture tilt adjustment handle. Schematic is the same as for the RLD-024.

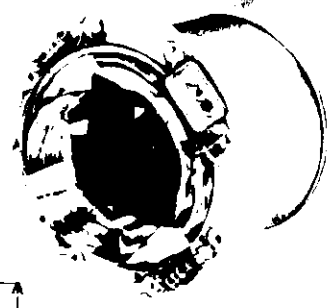

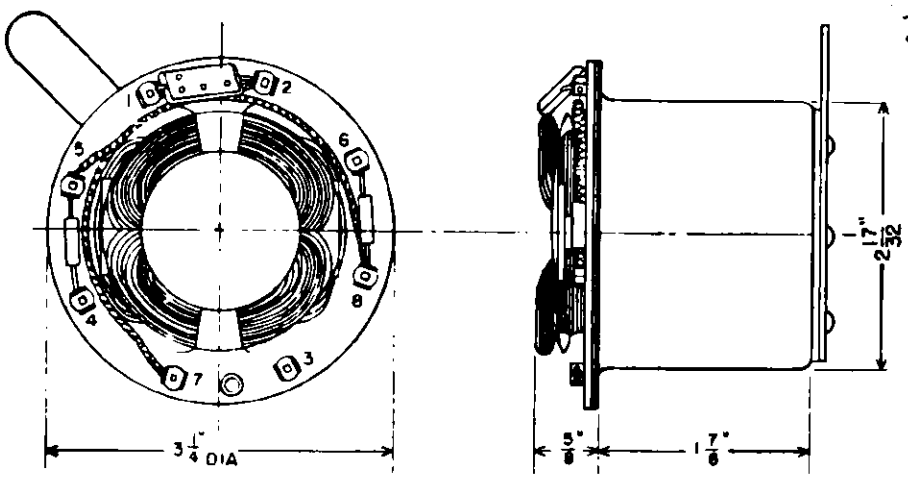

OUTLINE DIMENSIONS

QUALITY FEATURES OF G-E TV SWEEP COMPONENTS

1. Picture Tested Components -
   GE Horizontal Output Transformers and Sweep Yokes are production tested in a TV sweep circuit using cathode ray tube patterns. Picture produced must be accurate and uniform.

2. Ferrite Cores -
   Pioneered by GE for TV components, Ferrite Cores mean much higher efficiency, less heat generated, reduced power drain on tubes and longer tube life, than was the case with previous designs.

3. Thermoplastic Bonded Coils -
   Sweep Yoke Coils are wound exactly to form without shaping operations. The supplementary Formvar insulation then permanently sets the coil shape by an infra-red baking process.

4. Formex Insulated Wire -
   Formex, famous for its toughness and long life, is the wire insulation used in GE TV Components.

5. Nylon Coil Forms -
   GE Sweep Yokes and Focus Coils are equipped with nylon coil forms as further assurance of long life and a minimum of operating troubles.

6. Direct Replacements -
   The GE Replacement Guide lists only these TV models using GE made parts as original equipment. No circuit changes are required when using General Electric TV Components where recommended as direct replacements.

GENERAL ELECTRIC

Complete Replacement Guide—Sweep Components For General Electric TV Receivers

G-E TV SETS SET MODEL NO.	SWEEP YOKE	HORIZONTAL OUTPUT TRANSFORMER	NOTES	VERTICAL OUTPUT TRANSFORMER	FOCUS COIL	WIDTH COIL	LINEARITY COIL	HORIZONTAL OSCILLATOR COIL	ION TRAP MAGNET
800 (A & B)	RLD-010	RTO-076	1	RTO-064	RLF-025	RLD-011*	RLD-012*	RLI-086	RET-003
800 (C & D)	RLD-013	RTO-071		RTO-064	RLF-026	RLD-014	RLD-014	RLI-086	RET-003
801	RLD-001	RTO-076	2	RTO-016	RLF-008	RRC-034*			
802, 803	RLD-001	RTO-076	3	RTO-016	RLF-008	RRC-034*			RET-001
805,806,807,809(Early)	RLD-010	RTO-076	1	RTO-064	RLF-025	RLD-011*	RLD-012*	RLI-086	
805,806,807,809(S&T)	RLD-013	RTO-071		RTO-064	RLF-026	RLD-014	RLD-014	RLI-086	
805,806,807,809(U&W)	RLD-013	RTO-071		RTO-064	RLF-026	RLD-014	RLD-014	RLC-091	
810,811	RLD-006	RTO-076	4	RTO-053	RLF-013	RLD-004	RLD-005	RTM-003	
814	RLD-007	RTO-076	5	RTO-053	RLF-017	RLD-004*	RLD-005*	RTM-003	
815	RLD-013	RTO-068		RTO-074	RLF-029	RLD-014	RLD-014	RLC-091	RET-003
817,821(S&T)	RLD-015	RTO-071		RTO-064	RLF-028	RLD-014	RLD-014	RLC-091	
817,821(U&W)	RLD-013	RTO-071		RTO-064	RLF-028	RLD-014	RLD-014	RLC-091	
818	RLD-015	RTO-071		RTO-064	RLF-017	RLD-018		RLC-091	
820 (Early & R)	RLD-007	RTO-076	6	RTO-053	RLF-021	RLD-004*	RLD-005*	RTM-003	
820 (T)	RLD-007	RTO-068		RTO-053	RLF-021	RLD-014	RLD-014	RTM-003	
830 (Early & R)	RLD-010	RTO-076	6	RTO-053	RLF-017	RLD-004*	RLD-005*	RTM-003	
830 (T)	RLD-010	RTO-068		RTO-053	RLF-017	RLD-014	RLD-014	RTM-003	
835	RLD-006	RTO-076	4	RTO-061	RLF-013	RLD-004	RLD-005	RTM-003	
840	RLD-010	RTO-076	5	RTO-053	RLF-021	RLD-004*	RLD-005*	RTM-003	
10C101,10T1,10T4,10T5, 10T6	RLD-013	RTO-071		RTO-064	RLF-026	RLD-019	RLD-020	RLC-091	RET-003
12C101,12C102,12C105, 12K1,12T1	RLD-013	RTO-076		RTO-064	RLF-028	RLD-018	RLD-020	RLC-091	
12C107,12C108,12C109, 12T3,12T4	RLD-013	RTO-076		RTO-064	RLF-028	RLD-014	RLD-020	RLC-091	
12T7	RLD-013	RTO-076		RTO-064	RLF-026	RLD-014	RLD-020	RLC-091	RET-005
14C102,14C103,14T2, 14T3	RLD-025	RTO-090		RTO-064	RLF-039	RLD-014	RLD-016	RLC-091	RET-003
16C110,16C111,16C115, 16T1,16T2	RLD-024	RTO-085		RTO-064	RLF-038	RLD-014	RLD-016	RLC-091	RET-003
16C103,16C104,16C113, 16C116,16C117	RLD-025	RTO-090		RTO-064	RLF-039	RLD-014	RLD-016	RLC-091	RET-003
16K1,16K2,16T3,16T4, 16T5,16T6	RLD-025	RTO-090		RTO-064	RLF-039	RLD-014	RLD-016	RLC-091	RET-003
17C101,17C102	RLD-025	RTO-090		RTO-064	RLF-039	RLD-014	RLD-016	RLC-091	RET-003
19C101	RLD-023	RTO-088		RTO-074	RLF-037	RLD-018, RLD-019	RLD-014	RLC-091	RET-006

Notes on RTO-076 Horizontal Sweep Transformer

Additional small parts are required when installing RTO-076 as a substitute for the "molded" transformer used in many of the early post-war TV receivers. These parts are available in kits as indicated in the following notes. The kit of parts includes instructions.

Note 1 — Models 800A, B) with "molded"
Models 805, 806, 807 & 809) transformer.
1 - RTO-076 transformer
1 - 25W4GT tube
1 - RKT-010 kit

Note 2 — Model 801
1 - RTO-076 transformer
1 - RKT-006 kit

Note 3 — Models 802 & 803
1 - RTO-076 transformer
1 - RKT-007 kit

Note 4 — Models 810, 811 & 835
1 - RTO-076 transformer
1 - RKT-008 kit

Note 5 — Models 814, 840
1 - RTO-076 transformer
1 - 6W4GT tube
1 - RKT-009 kit

Note 6 — Models 820, 830 (with "molded"transformer)
1 - RTO-076 transformer
1 - 6W4GT tube
1 - RKT-009 kit

General Notes

RTO-092 - Horizontal Sweep Transformer (with long leads), may be used in place of RTO-076.

RTO-085 - Horizontal Sweep Transformer, may be used in place of RTO-090.

RLF-038 - Focus Coil, may be used in place of RLF-039.

*When RTO-076 is used as substitute horizontal output transformer, use coils included with kits described in Notes 1, 2, 3, 5 and 6.

G.E. Sweep Components For Other Make TV Receivers

MANUFACTURER	PART DESCRIPTION	MFRS. PART NUMBER	G-E CATALOG NUMBER	USED IN SET MODEL NO.
AIR KING	Focus Coil	PB-28277	RLF-038	2016R,2017*
ANSLEY	Horizontal Sweep Transformer	TR-109	RTO-092	
AUTOMATIC	Horizontal Sweep Transformer		RTO-068	TV-1249,TV-1250,TV-1605,TV-1615,TV-1649, TV-1650,TV-1651,TV-1694,TV-5001,TV-5006, TV-5012,TV-5019,TV-5061,TV-5077,TV-5111.
	Focus Coil		RLF-028	TV-1649,TV-1650
	Deflection Yoke		RLD-013	TV-1649,TV-1650,TV-1651
CAPEHART-FARNSWORTH	Horizontal Sweep Transformer	750089B-2	RTO-092	3001-B,3001M
		750089C-2		3002-B,3002M,3007-B,3007M
	Focus Coil	650181A-1	RLF-026	3006-M,3008M,4002-M
		650154A-1	RLF-026	3001-B,3001M,3002-B,3002M,3007-B,3007M
		650204B-1	RLF-028	3005M
	Deflection Yoke	750093A-1	RLD-013	3001-B,3001-M,3002-B,3002-M,3007-B,3007-M
ELECTROMATIC	Horizontal Sweep Transformer		RTO-092	120, 150
	Width/Linearity Control		RLD-014	120, 150
EMERSON	Horizontal Sweep Transformer	738039	RTO-092	614,637,650,654,655
FREED-EISEMANN	Horizontal Sweep Transformer	TR-A37	RTO-068	CH1620A 54 - 55 - 56
		TR-A47	RTO-092	CHT 1620B 54 - 55 - 56 - 68
		TR-B41	RTO-092‡	CHT-1900 101 - 102 - 103 - 104
	Width Control	LC-A23	RLD-014	CHT 1620B 54 - 55 - 56 - 68
	Linearity Control	LC-A23	RLD-014	
GAROD	Horizontal Sweep Transformer	C-9.244	RTO-092	14CT4,14T2,1671,1672,1674,1900,1974
	Width/Linearity Control	B-1.520	RLD-014	14CT4,14T2,1671,1672,1674,1900,1974
MOTOROLA	Focus Coil	24B790905	RLF-028	TS-16
NATIONAL CO.	Width Coil	P273	RLD-014	
RADIO CRAFTSMAN	Horizontal Sweep Transformer	19X006	RTO-092	RC-100
	Focus Coil	5X802	RLF-028	RC-100
	Width Control	5X803	RLD-014	RC-100
	Deflection Yoke	5X801	RLD-013	RC-100
STEWART WARNER	Horizontal Sweep Transformer	508679	RTO-092	9106,9108,9113,9120,9121,9122,9123
STROMBERG-CARLSON	Focus Coil	114091	RLF-038	119
		114683	RLF-038	16-C with 16GP4) picture 16AP4) tube 16TP4)
TECH-MASTER	Horizontal Sweep Transformer		RTO-092	1930
	Width Control		RLD-014	1930
TELE-KING	Horizontal Sweep Transformer	T-111	RTO-092	114,116B,116M,116W,516,516B,919,16ATR,16TR, MST-12,MST-14
	Width Control	L-M77J4	RLD-014	MST-16,ARTV-14,ARTV-19,114,116B,116M,116W, 516,516B,919,16ATR,16TR,MST-12,MST-14,MST-16, ARTV-14,ARTV-19
TELE-TONE	Horizontal Sweep Transformer	TTR-209D	RTO-092	305,306,308,309,310,311,312,315,316,317,319
	Width Control	TLF-553	RLD-014	305,306,308,309,310,311,312,315,316,317,319
VIDEO CORP. (VIDEOLA)	Width/Linearity Control	GE-77J4	RLD-014	VS-160,VS-69,VS-99
	Horizontal Sweep Transformer	2-6-19501	RTO-092	611,612,912,922
		GE-77J1	RTO-068	VS-69,VS-99,VS-160

General Notes:

*Not used in all sets of this model number.
‡Slight mechanical modification necessary.

Every effort has been made to make the above table helpful, but G. E. is not responsible for changes made without its knowledge.

GENERAL ELECTRIC

PARTS SECTION • RECEIVER DIVISION • ELECTRONICS PARK
SYRACUSE, NEW YORK

R78-041 (Second Printing)

Printed in U.S.A.